DC/DC CONVERTER

Step-Down (Buck) 48V/12V

20A



DC/DC converters are electronic devices that adapt electrical power between different DC voltage levels.
In automotive applications, they ensure compatibility between high-voltage systems and low-voltage components, enabling efficient power distribution and stable operation of vehicle electronics.

05481220 DC/DC Converter
This DC-DC converter delivers a stable 12V output from a 24V-59V input range, with a nominal current of 20A. It includes an AMPHENOL ATP04-4P waterproof aerial connector and a robust housing with IP67 protection. Custom connector configurations are available upon request, ensuring seamless integration in automotive, mobility, and off-highway applications.

Benefits:
Reliability: Guilera´s voltage conversion technology ensures stable performance in demanding conditions.
Energy efficiency: Optimized design reduces energy consumption and operational costs.
Versatility: Wide input voltage range and no minimum load requirement make it suitable for various vehicle types.
High performance: Delivers reliable output power up to 85°C.
Durability: Robust construction to withstand harsh environmental conditions.
Safety: Advanced protections against reverse polarity, overload, short circuits, and overheating.
Environmental compliance: Fully compliant with RoHS and CE standards for sustainability.
EMC compliance: Meets ECE R10 standards, ensuring electromagnetic compatibility.

Technical Data

Nominal Input Voltage	48 Vdc
Input Range Voltage	24-59 Vdc
Nominal Output Voltage	13,5±0,5 Vdc
Output Voltage Ripple	<200 mVpp
Output Switching Freq.	120 KHz ± 10%
Nominal current	20 A
Peak Current	30 A (>500ms)
Stand-By Current	< 3 mA <0,1 mA (Enable / Key OFF)
Storage Temperature	-40°C to 85°C
Working Temperature	-40°C to 85°C (with derating)
Efficiency	>95%

Applications:
Light mobility vehicles: e-motorcycles, e-scooters, e-bikes, golf carts, go-karts.

Industrial vehicles: Forklifts, pallet stackers, automated guided vehicles (AGVs).

Agricultural vehicles: Tractors, sprayers, lawn mowers and utility vehicles.

Transportation: Buses, trucks, delivery vans.

Construction vehicles: Excavators, wheel loaders, bulldozers.

Specialized vehicles: Police cars, fire trucks, ambulances and municipal service cars.

DC/DC CONVERTER

Step-Down (Buck) 48V/12V

20A

COMING SOON

Pin-Out

Pin 1 (RED): Vin
Pin 2 (BLACK): GND
Pin 3 (GREEN): Vout
Pin 4 (BROWN): Enable
Connector Type: AMPHENOL ATP04-4P

Block Function Diagram

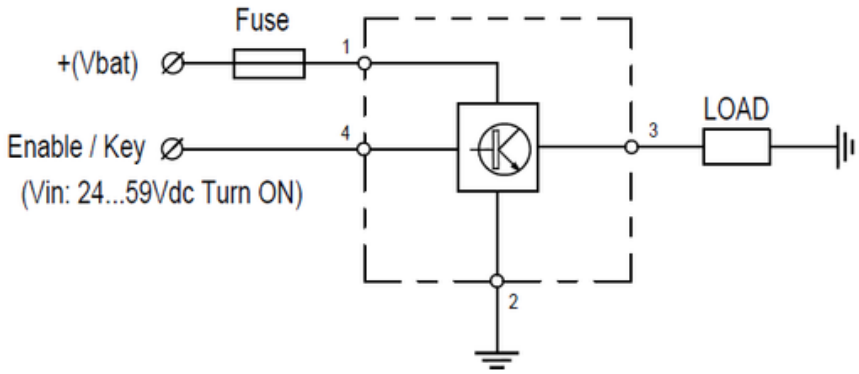

Protections

Input reverse polarity
Output overvoltage
Internal overheat
Short circuit
Overload
IP67

Order Information

DC/DC 48V/12V 20A: **05481220**

Dimensions

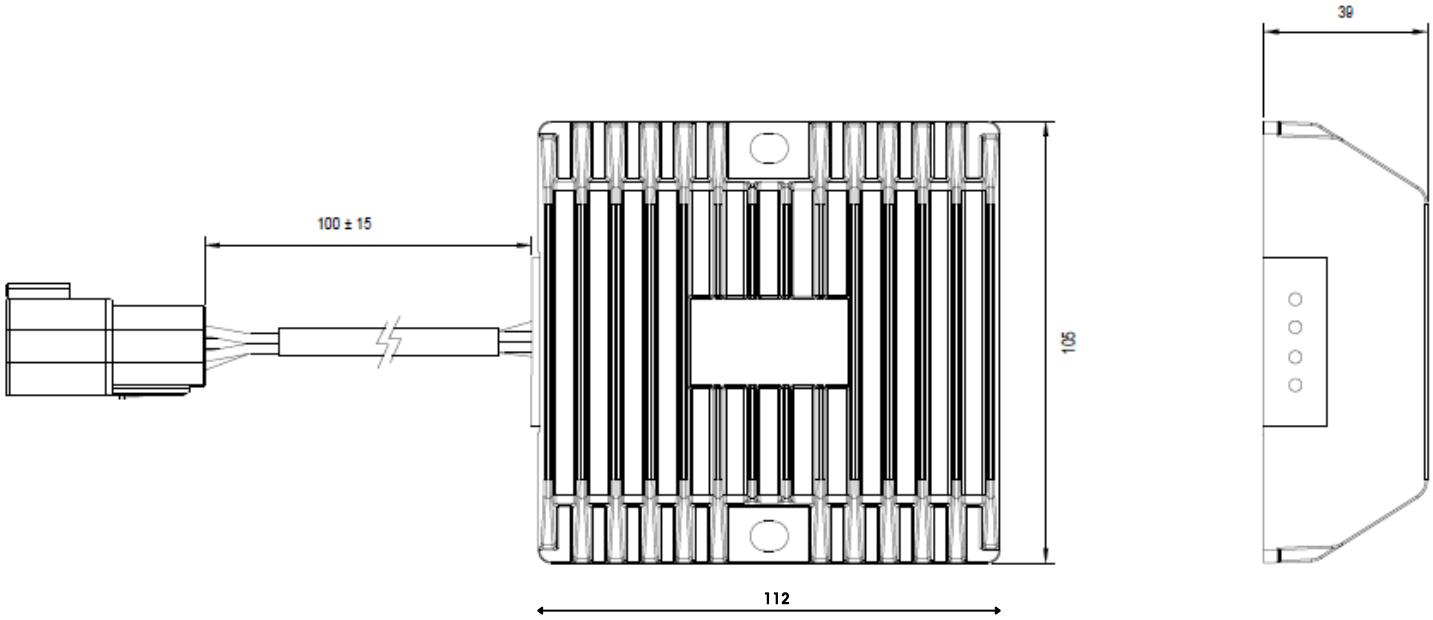

Technical Notice: Images and specifications are for reference only. Guilera reserves the right to modify product design and features without prior notice. The latest validated technical drawing is the only official document certifying product characteristics.

GUILERA S.A.

Founded in 1953, Guilera S.A. specializes in advanced electronic and electromechanical systems for the automotive, off-highway, and mobility sectors.
Our products include reliable DC-DC converters, electronic power control systems for traction, advanced flasher units, and solid-state electronics.
Guilera is committed to sustainability and social responsibility, integrating eco-friendly practices and pursuing CSR certifications.
Serving OEMs and Tier 1 suppliers, we continuously innovate to shape the future of transportation and mobility.

https://www.linkedin.com/company/guilera

Carrer de Ramon Llull 8, 08750 Molins de Rei, , Barcelona (Spain) Tel.: +34 936 68 17 94 / e-mail: guilera@guilera.com