# DC/DC CONVERTER

Switch Mode 48V/12V

1A

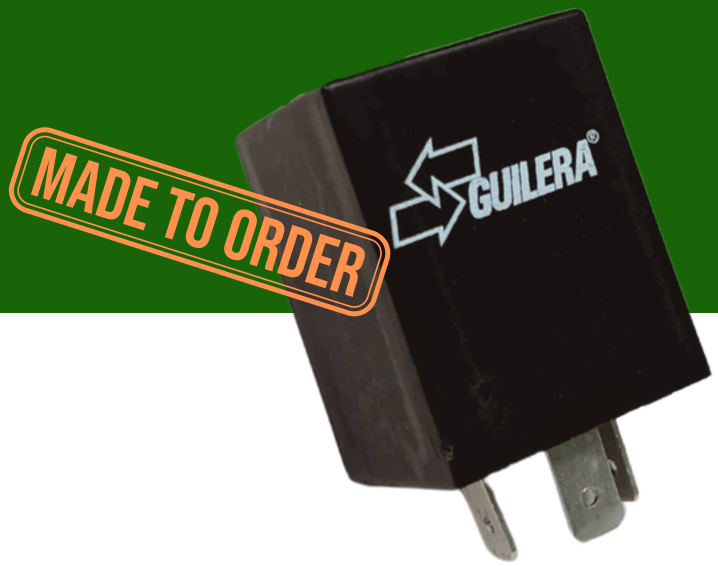


**DC/DC converters** are electronic devices that adapt electrical power between different DC voltage levels. In automotive applications, they ensure compatibility between high-voltage systems and low-voltage components, enabling efficient power distribution and stable operation of vehicle electronics.

## 054812C01 DC/DC Converter

This converter provides a 13V output for 12V systems from a 30-60V input with a nominal current of 1A.
It features 3 ISO 8092-compliant FASTON terminals and a durable housing with IP54 sealing. Additional configurations are available upon request, ensuring compatibility with automotive, mobility, and off-highway environments.

## Benefits:

Reliability: Guilera´s voltage conversion technology ensures stable performance in demanding conditions.
Energy efficiency: Optimized design reduces energy consumption and operational costs.
Versatility: Wide input voltage range and no minimum load requirement make it suitable for various vehicle types.
High performance: Delivers reliable output power up to 85°C.
Durability: Robust construction to withstand harsh environmental conditions.
Safety: Advanced protections against reverse polarity, overload, short circuits, and overheating.
Environmental compliance: Fully compliant with RoHS and CE standards for sustainability.
EMC compliance: Meets ECE R10 standards, ensuring electromagnetic compatibility.

## Technical Data

| | |
|---|---|
| Nominal Input Voltage | 48 Vdc |
| Input Range Voltage | 30-60 Vdc |
| Output Voltage Range | 13±0,5 Vdc |
| Output Voltage Ripple | <500 mVpp |
| Output Switching Frequency | 220 KHz ± 10% |
| Nominal Current | 1A |
| Peak Current | 3A |
| Stand-By Current | < 1 mA |
| Storage Temperature | -40°C to 85°C |
| Working Temperature | -40°C to 85°C (with derating) |
| Efficiency | >85% |
| Encapsulation | IP54 |
| Weight | 25 ± 5 gr |

## Applications:

Industrial vehicles: Forklifts, pallet stackers, automated guided vehicles (AGVs).

Agricultural vehicles: Tractors, sprayers, lawn mowers and utility vehicles.

Transportation: Buses, trucks, delivery vans.

Construction vehicles: Excavators, wheel loaders, bulldozers.

Light mobility vehicles: E-scooters, e-bikes, golf carts, go-karts.

Specialized vehicles: Police cars, fire trucks, ambulances and municipal service cars.



# DC/DC CONVERTER

## Switch Mode 48V/12V

1A

### Pin-Out

Pin 1: V in
Pin 2: GND
Pin 3: V out

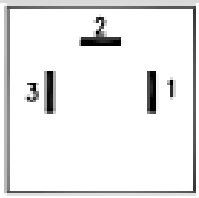


### Dimensions

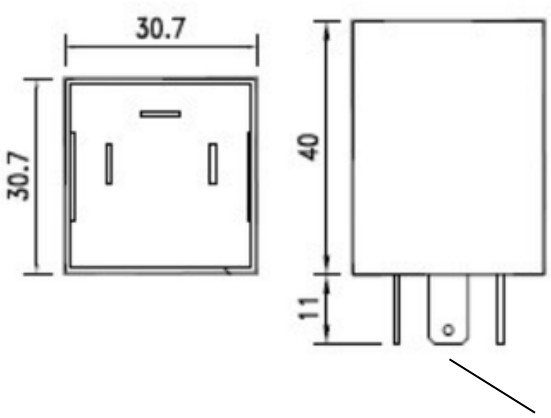


ISO 8092
(6.3 x 0.8-OH)

### Order Information

DC/DC 48V/12V 1A: 054812C01

### Protections

Internal Overheat
Input Reverse Polarity
Overload
Short Circuit
IP54

### Block Function Diagram

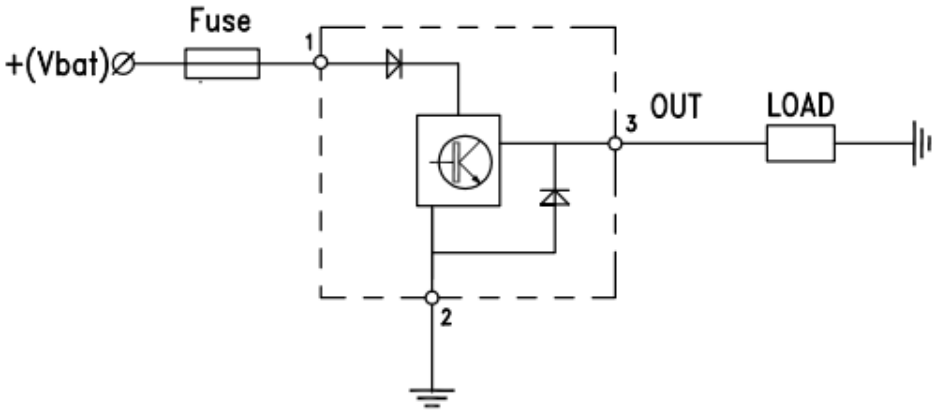


**Technical Notice**: Images and specifications are for reference only. Guilera reserves the right to modify product design and features without prior notice. The latest validated technical drawing is the only official document certifying product characteristics.

**GUILERA S.A.**

Founded in 1953, Guilera S.A. specializes in advanced electronic and electromechanical systems for the automotive, off-highway, and mobility sectors.

Our products include reliable DC-DC converters, electronic power control systems for traction, advanced flasher units, and solid-state electronics.

Guilera is committed to sustainability and social responsibility, integrating eco-friendly practices and pursuing CSR certifications.

Serving OEMs and Tier 1 suppliers, we continuously innovate to shape the future of transportation and mobility.

https://www.linkedin.com/company/guilera

Carrer de Ramon Llull 8, 08750 Molins de Rei, , Barcelona (Spain) Tel.: +34 936 68 17 94 / e-mail: guilera@guilera.com