DC/DC CONVERTER

Step-Down (Buck) 48-96V/12V

80A (960W)



DC/DC converters are electronic devices that adapt electrical power between different DC voltage levels.
In automotive applications, they ensure compatibility between high-voltage systems and low-voltage components, enabling efficient power distribution and stable operation of vehicle electronics.

The 059612C80 DC/DC Converter delivers 12V from a 35V-120V input with a 80A output.
With two integrated connectors and an IP67 housing, this converter ensures reliable power for automotive, mobility, and off-highway applications.

Benefits:

Enhanced Reliability
Stable voltage conversion ensures consistent performance.
Energy efficiency
Reduces power consumption, lowering costs.
Versatility
Suitable for various vehicle types.
Long-term durability
Withstands harsh conditions.
Safety
Advanced protection features for vehicle systems.
Compliance
Complies with RoHS Directive for restricted hazardous substances and ECE R10 standards for electromagnetic compatibility.

Technical Data

Nominal Input Voltage	**48-96 Vdc**
Input Range Voltage	35-120 Vdc
Input Turn ON Voltage	<25 Vdc
Input Overvoltage Turn OFF	<150 Vdc
Output Voltage Range	13,5 Vdc ± 0,5 Vc
Output Switching Frequency	200 kHz ± 50kHz
Maximal Input Current	45A
Nominal Output Current	80A
Peak Current	100A (at 23°C)
Stand-By Current (enable OFF)	< 2 mA (Key Switch OFF)
Working Temperature	-40°C to 85°C
Storage Temperature	-40°C to 105°C
Efficiency	>85%
Encapsulation	IP67

Applications:

- Industrial vehicles: Forklifts, pallet stackers, automated guided vehicles (AGVs).
- Agricultural vehicles: Tractors, sprayers, lawn mowers.
- Transportation: Buses, trucks, delivery vans.
- Construction vehicles: Excavators, wheel loaders, bulldozers.
- Specialized vehicles: Police cars, fire trucks, ambulances, utility vehicles, and municipal service cars.
- Etc.



DC/DC CONVERTER

Step-Down (Buck) 48-96V/12V

80A (960W)

Pin-Out

Connector 1: Type AMPHENOL AHDP02-18-06PN

Input Key Switch
Input Voltage
GND

Connector 2: Type AMPHENOL AHDP02-18-06SN

+12V Switched Output
GND

Dimensions

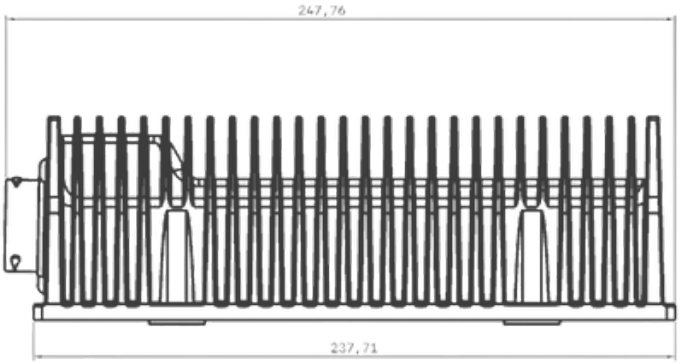

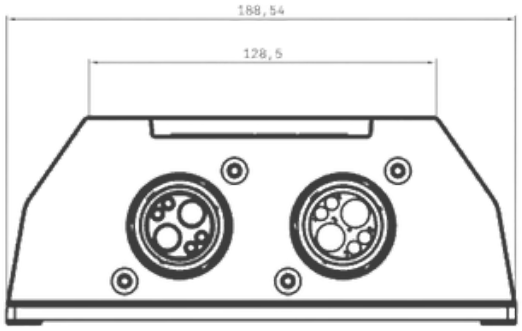

Wiring Diagram

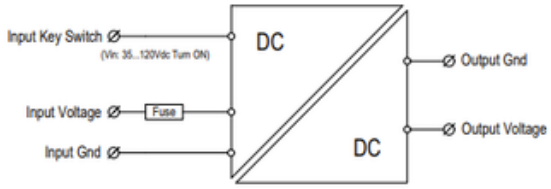

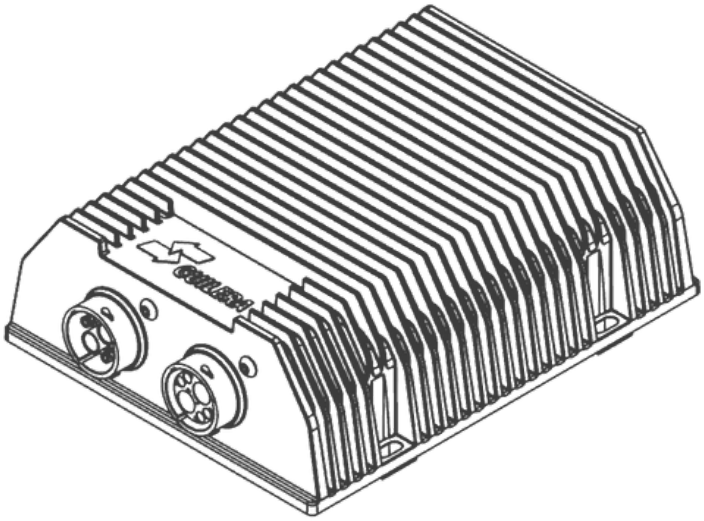

Protections

IP67
Internal Overheat
Input Reverse Polarity
Input Overvoltage
Output Overvoltage
Overload
Short Circuit

Order Information

DC/DC 96V/12V 80A (1kW)	059612C80

Technical Notice: Images and specifications are for reference only. Guilera reserves the right to modify product design and features without prior notice. The latest validated technical drawing is the only official document certifying product characteristics.

GUILERA S.A.

Founded in 1953, Guilera S.A. specializes in advanced electronic and electromechanical systems for the automotive, off-highway, and mobility sectors.
Our products include reliable DC-DC converters, electronic power control systems for traction, advanced flasher units, and solid-state electronics.
Guilera is committed to sustainability and social responsibility, integrating eco-friendly practices and pursuing CSR certifications.
Serving OEMs and Tier 1 suppliers, we continuously innovate to shape the future of transportation and mobility.

https://www.linkedin.com/company/guilera

Carrer de Ramon Llull 8, 08750 Molins de Rei, , Barcelona (Spain) Tel.: +34 936 68 17 94 / e-mail: guilera@guilera.com